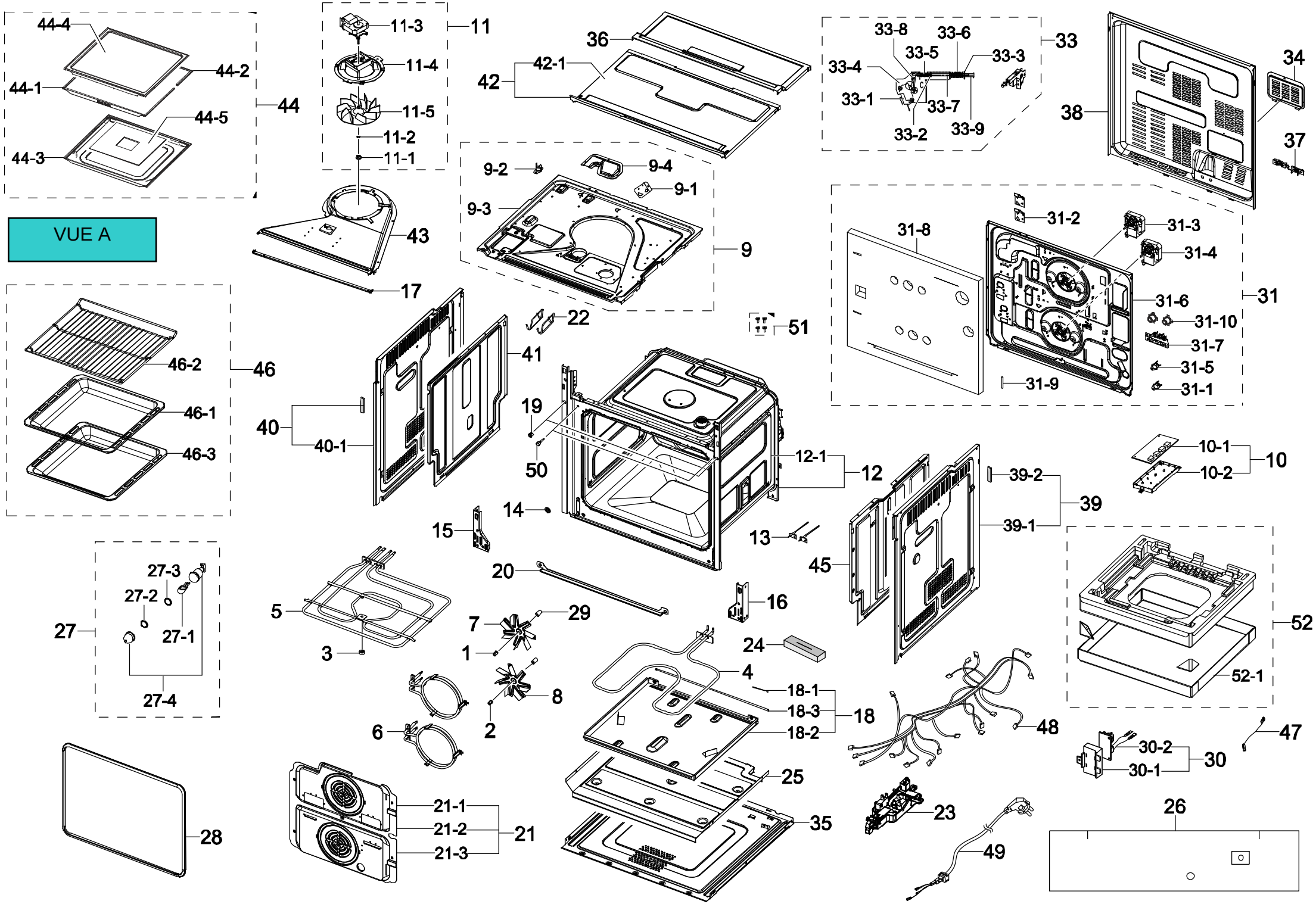
VUE A
44
44-1
44-2
44-3
44-4
44-5
11
11-1
11-2
11-3
11-4
11-5
43
17
36
42
42-1
9
9-1
9-2
9-3
9-4
33
33-1
33-2
33-3
33-4
33-5
33-6
33-7
33-8
33-9
38
34
37
31
31-1
31-2
31-3
31-4
31-5
31-6
31-7
31-8
31-9
31-10
46
46-1
46-2
46-3
41
40
40-1
22
51
19
50
12
12-1
14
15
13
20
16
45
39
39-1
39-2
10
10-1
10-2
52
52-1
27
27-1
27-2
27-3
27-4
5
3
7
29
1
24
4
8
2
6
18
18-1
18-2
18-3
48
47
30
30-1
30-2
25
21
21-1
21-2
21-3
35
23
49
26
28

VUE B

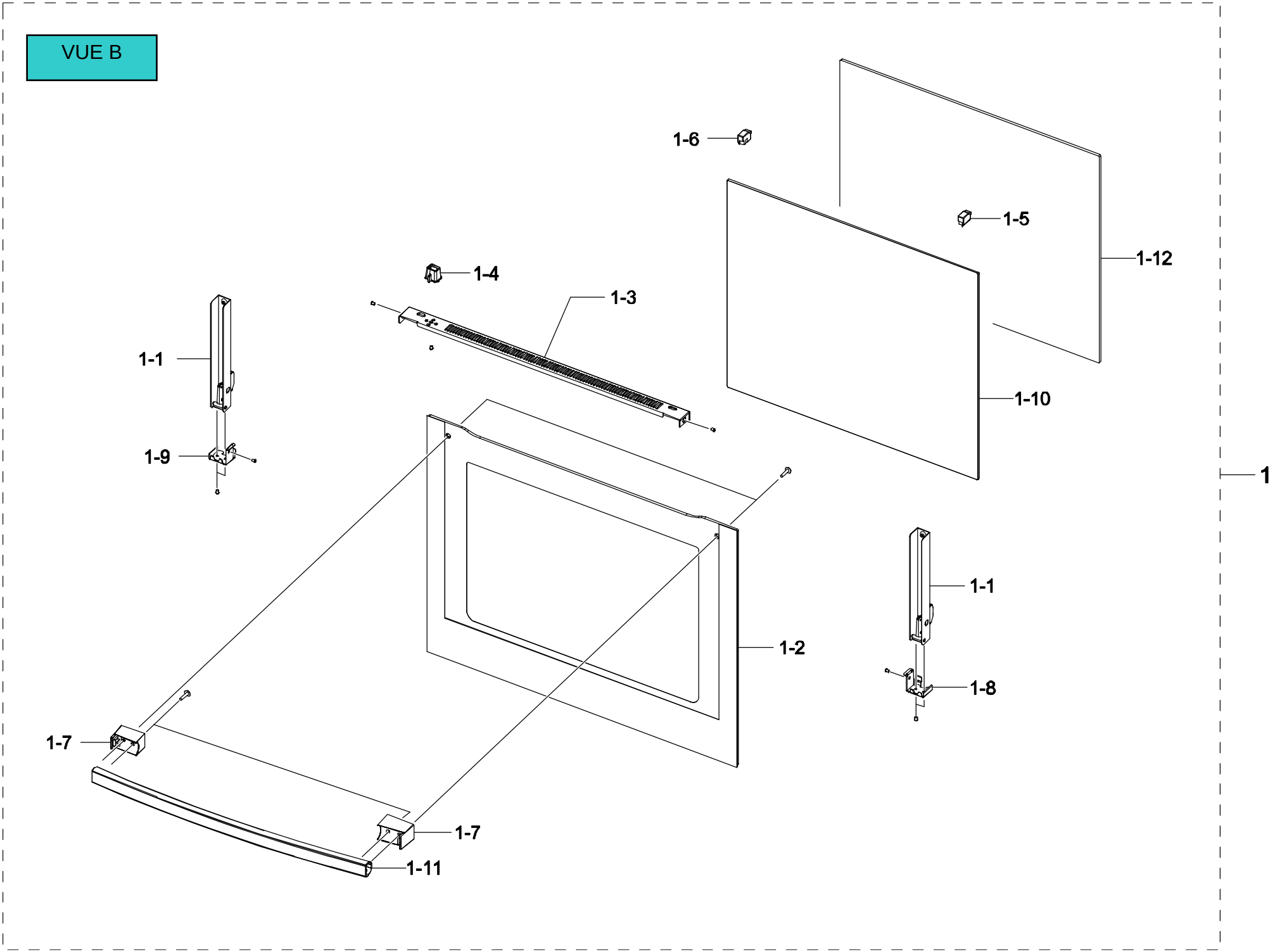

VUE C

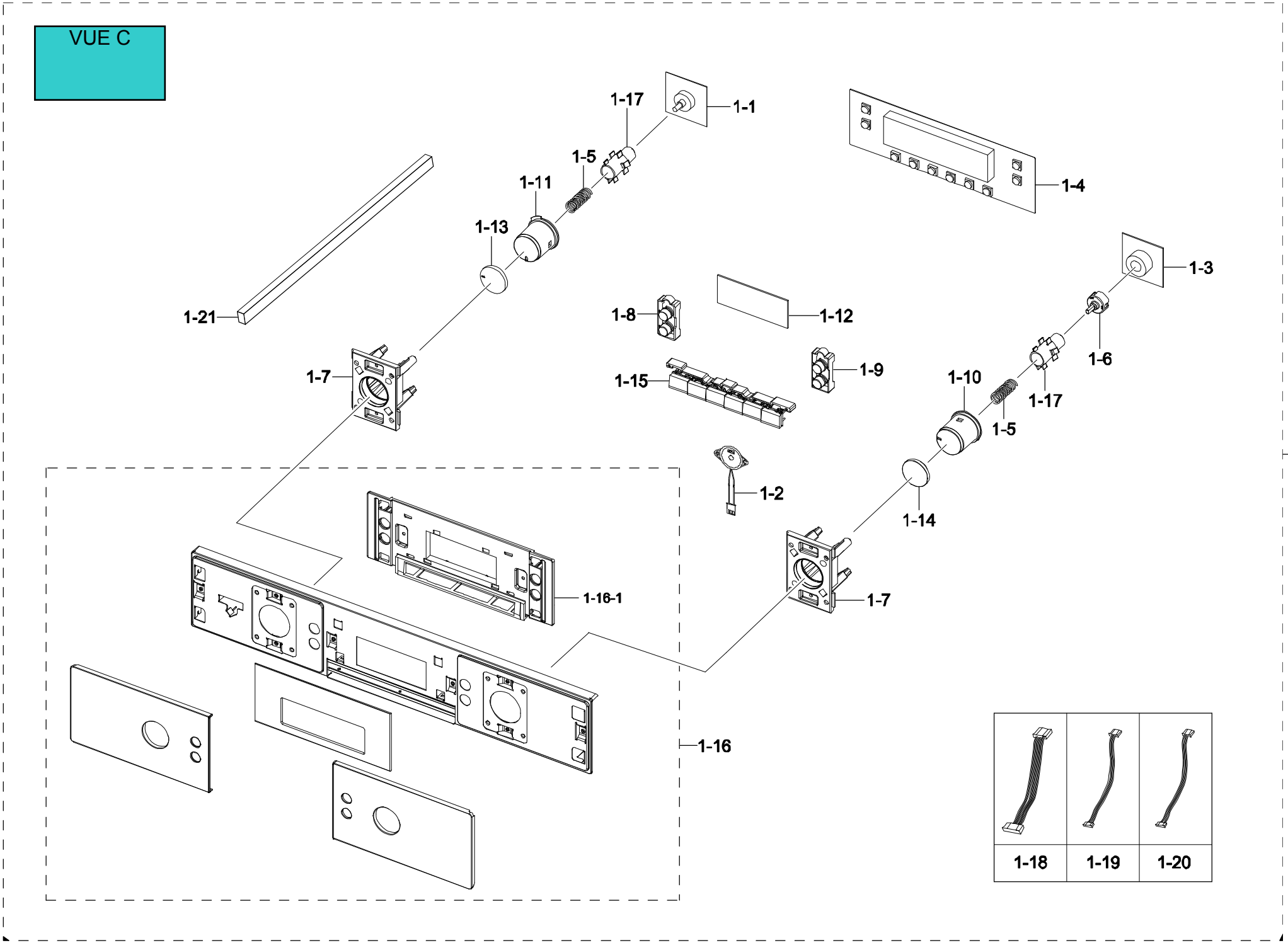
1-17
1-1
1-5
1-11
1-13
1-4
1-3
1-21
1-8
1-12
1-6
1-7
1-15
1-9
1-10
1-17
1-5
1
1-2
1-14
1-16-1
1-7
1-16
1-18
1-19
1-20